FORM MS-5562-52
REPLACES FORM MS-5562-121
FILE IN SECTION 2 OF SERVICE MANUAL

Illustrated Parts List

MODEL SERIES

200401 to 200466

TYPE NUMBERS
0010 to 0031
0110 to 0192

TO FIND
THE CORRECT NUMBER OF THE PART YOU NEED:
FOLLOW THE INSTRUCTIONS BELOW.

A. Refer to Engine Model, Type and Code Number (formerly Serial Number) that is stamped on the blower housing or name plate of engine. Engine type numbers such as 0147 01 are listed herein only as 0147. The two digits (01 or 02, etc.) to the right of the space are not needed for parts identification. Then use the Illustrated Parts List covering these Model Series.

B. Refer to Illustrated Parts section and compare the old part with illustration. The number on the illustration is the Reference Number. Assemblies include all parts shown in frames. All parts shown in assembly frames on which individual reference numbers are given can be purchased separately.

C. After the Reference Number has been identified, refer to the Numerical Parts List, where Reference and Master Part Numbers are listed. THE MASTER PART IS USED ON ALL TYPE NUMBERS EXCEPT THOSE TYPE NUMBERS UNDER "NOTE".

D. If a "Note" appears below the Master Part Number, this means that this part differs from the Master Part for certain types. If the Type Number is listed under "Note", order the part referred to.

E. If the Engine Type Number does not appear after any part number listed under "Note", use the Master Part Number.

F. For Type Numbers higher than those covered by this book, please refer to the factory if you are unable to identify the part by comparison.

ORIGINAL
BRIGGS & STRATTON
SERVICE PARTS

200401 to 200466

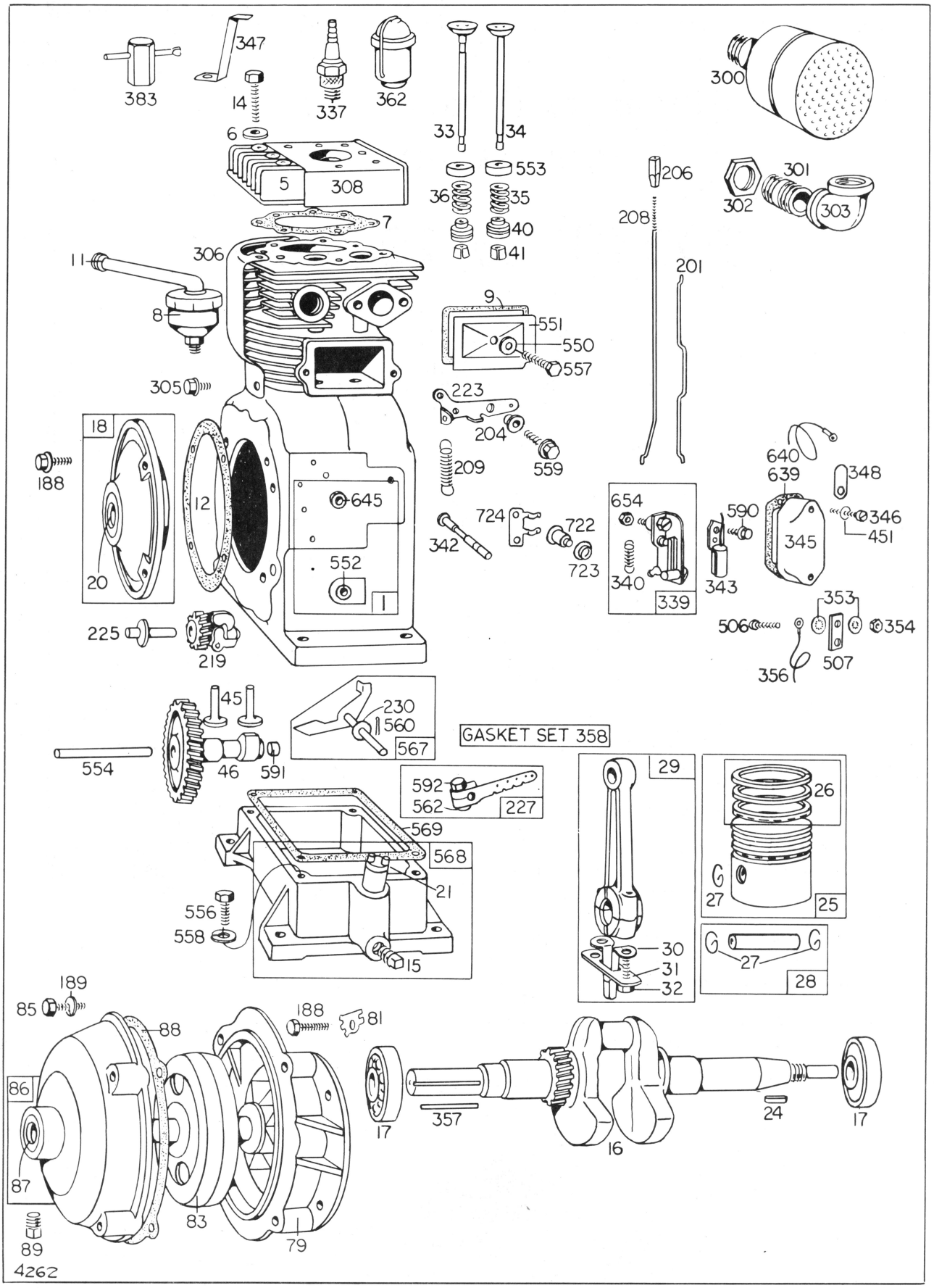

Assemblies include all parts shown in frames.

200401 to 200466

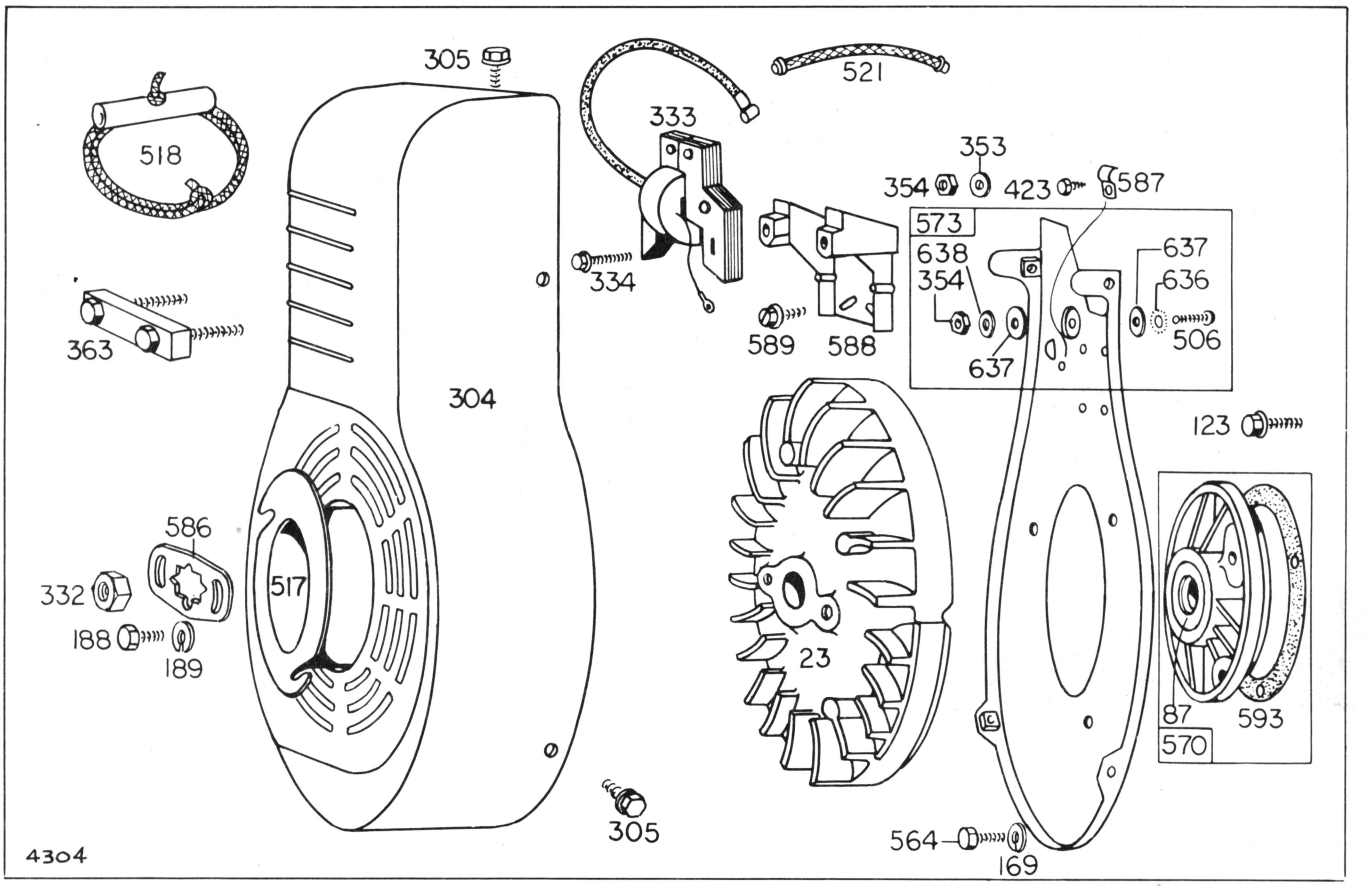

Assemblies include all parts shown in frames.

200401 to 200466

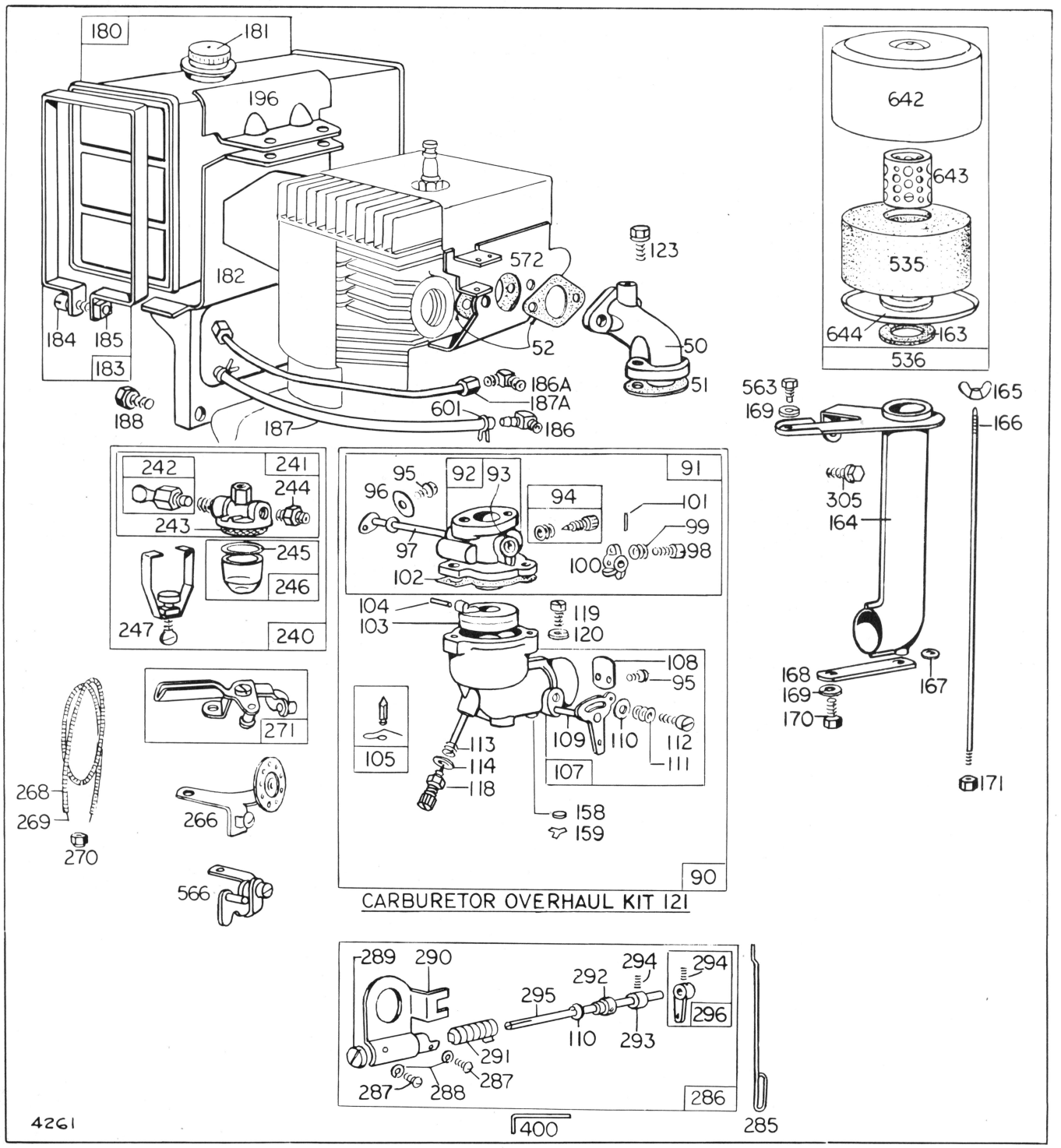

Assemblies include all parts shown in frames.

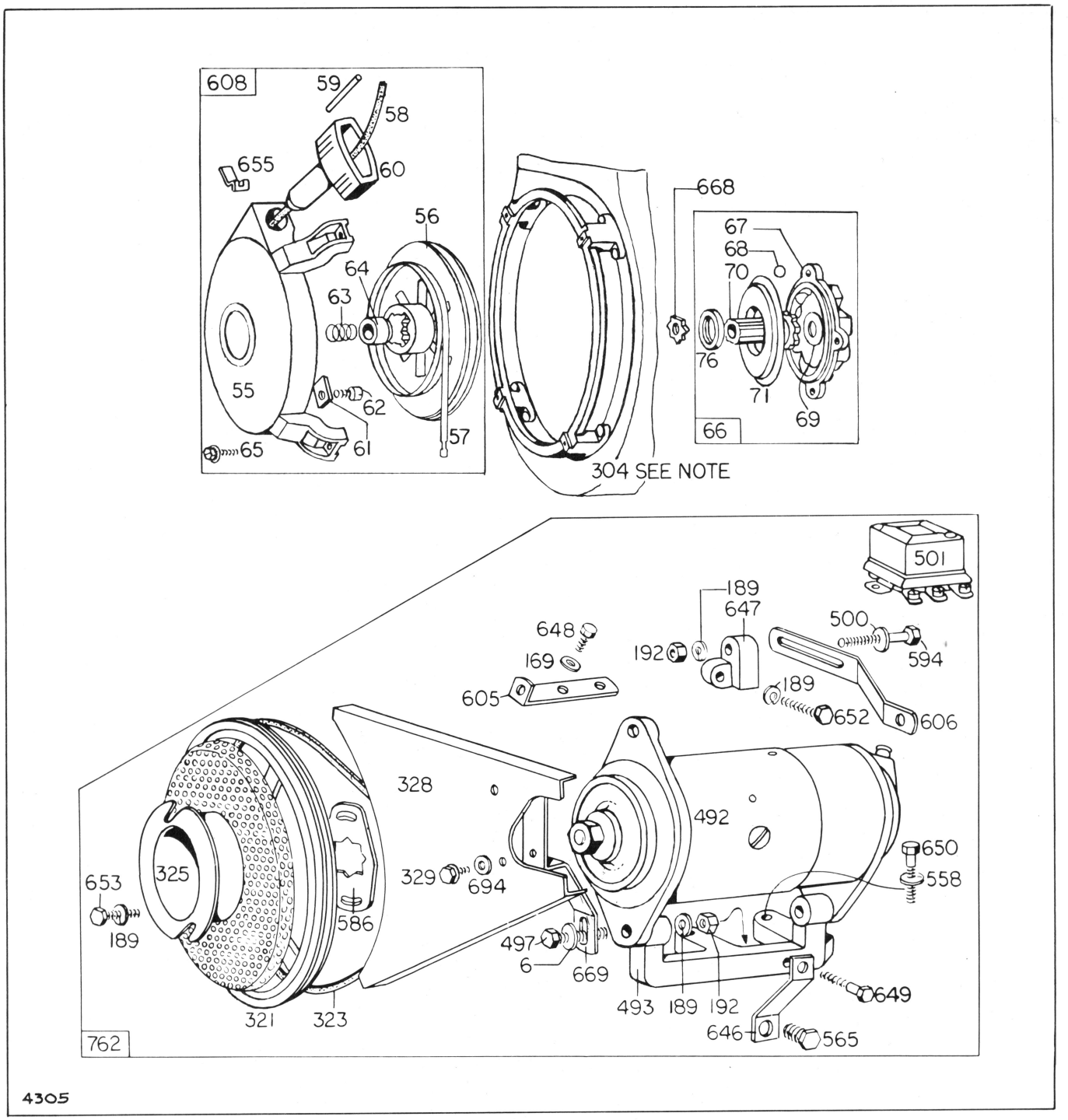

Assemblies include all parts shown in frames.

200401 to 200466

REF. NO.	PART NO.	DESCRIPTION
1	**298199**	Cylinder Assembly
	Note:	**298563** Cylinder Assy. Used on type Nos. 0023, 0135, 0142, 0143, 0149, 0150, 0153, 0155, 0165, 0166, 0168, 0185, 0186, 0188.
5	**210620**	Head—Cylinder
6	**22963**	Washer—Plain
7	***27752**	Gasket—Cylinder Head
8	**297704**	Breather
9	***66214**	Gasket—Valve Cover
11	**67068**	Tube—Breather
12	***66224**	Gasket—Crankcase Cover
14	**91442**	Screw—Cylinder Head
	Note:	**93358** Screw—Cap, Hex. Hd., 5/16-18 x 3-1/2" (2) **230705** Spacer (2) Used on type Nos. 0133, 0157, 0175, 0180.
15	**91084**	Plug—Pipe—3/8"
	Note:	**92738** Plug—Oil Drain Used on type No. 0142. **92817** Plug—Oil Drain Used on type No. 0143.
16	**260920**	Crankshaft
	Note:	**260926** Crankshaft Used on type Nos. 0030, 0116, 0128, 0129, 0132, 0133, 0134, 0142, 0147, 0149, 0150, 0151, 0157, 0170, 0173, 0175, 0176, 0183, 0184, 0186, 0191. **260944** Crankshaft Used on type Nos. 0021, 0112, 0131, 0159, 0165, 0166. **260945** Crankshaft Used on type Nos. 0020, 0022, 0113, 0120, 0124, 0125, 0130, 0136, 0137, 0138, 0145, 0146, 0148, 0155, 0160, 0161, 0171, 0177, 0179, 0182, 0187. **260962** Crankshaft Used on type Nos. 0023, 0115, 0135, 0144, 0153, 0158, 0163, 0168, 0172, 0185. **260963** Crankshaft Used on type No. 0140. **260965** Crankshaft Used on type Nos. 0143, 0188. **260966** Crankshaft Used on type No. 0141. **260968** Crankshaft Used on type Nos. 0010, 0152, 0156. **261064** Crankshaft Used on type No. 0178. **261090** Crankshaft Used on type No. 0180.
17	**29530**	Bearing—Ball
18	**290724**	Cover Assy.—Crankcase (Plain Bearing) Used only on Model 200401 to 200406 engines.
	291299	Cover Assy.—Crankcase (Ball Bearing) Used only on Model 200431 to 200436 engines.
20	**298423**	Seal—Oil
21	**66768**	Plug—Oil Filler
	Note:	**292495** Oil Filler Cap Uses: **65938** Gasket—Filler Cap Used on type No. 0143. **299664** Cap and Dipstick—Oil Filler Uses: **299401** Tube—Filler **68838** Seal—Filler Tube to Crankcase Used on type Nos. 0126, 0127, 0175, 0176, 0180.
23	**298974**	Flywheel—Magneto
	Note:	**220804** Screen **220803** Support **230397** Spacer (4) **93125** Screw (4) **67632** Washer (4) Used on type Nos. 0120, 0173, 0176, 0178, 0180, 0182. **211555** Fan and Pulley **221851** Screen—Rotating **93521** Screw—Screen Mounting (4) **91386** Screw—Fan to Flywheel Mounting (2) **90366** Lockwasher—Fan to Flywheel Mounting (2) **22906** Plate—Locking Used on type Nos. 0118, 0126, 0127, 0174.
24	**61760**	Key—Flywheel
25	**294676**	Piston Assy.—Standard
	294677	Piston Assy.—.010" O.S.
	294678	Piston Assy.—.020" O.S.
	294679	Piston Assy.—.030" O.S.
PISTON RING SETS		
	Note:	For Chrome Piston Ring Set — standard size — order Part No. 298746.
26	**292100**	Ring Set—Piston—Std. Includes: **210076** Ring—Piston, Comp., Top and Center, Standard **61292** Ring—Piston, Oil, Standard
	292101	Ring Set—Piston—.010" O.S. Includes: **210077** Ring—Piston, Comp., Top and Center, .010" O.S. **61335** Ring—Piston, Oil, .010" O.S.
	292102	Ring Set—Piston—.020" O.S. Includes: **210078** Ring—Piston, Comp., Top and Center, .020" O.S. **61336** Ring—Piston, Oil, .020" O.S.
	292103	Ring Set—Piston—.030" O.S. Includes: **210079** Ring—Piston, Comp., Top and Center, .030" O.S. **61337** Ring—Piston, Oil, .030" O.S.

* Included in Gasket Set—Part No. 294736.

REF. NO.	PART NO.	DESCRIPTION
27	68546	Lock—Piston Pin
28	298401	Pin Assy.—Piston—Std.
	294681	Pin Assembly—Piston—.005" O.S.
29	299581	Rod Assy.—Connecting
30	221888	Dipper—Connecting Rod
31	221887	Lock—Conn. Rod Screw
32	92659	Screw—Connecting Rod
33	23835	Valve—Exhaust
	Note:	**26735** Valve—Exhaust Used on type Nos. 0023, 0135, 0142, 0143, 0149, 0150, 0153, 0155, 0165, 0166, 0168, 0185, 0186, 0188.
34	23836	Valve—Intake
	Note:	**23835** Valve Used on type Nos. 0023, 0135, 0142, 0143, 0149, 0150, 0153, 0155, 0165, 0166, 0168, 0185, 0186, 0188.
35	65906	Spring—Intake Valve
36	65906	Spring—Exhaust Valve
	Note:	**26828** Spring—Exhaust Valve Used on type Nos. 0019, 0023, 0135, 0142, 0143, 0149, 0150, 0153, 0155, 0159, 0165, 0166, 0168, 0174, 0185, 0186, 0188, 0190.
40	68293	Retainer—Valve Spring Collar
	Note:	**292260** Rotocoil—Exhaust Valve Used on type Nos. 0019, 0023, 0135, 0142, 0143, 0149, 0150, 0153, 0155, 0159, 0165, 0166, 0168, 0174, 0185, 0186, 0188, 0190.
41	68283	Collar—Valve Spring
45	63659	Tappet—Valve
46	211304	Gear—Cam
50	21769	Elbow—Carburetor Intake
51	†*65647	Gasket—Intake Elbow
52	*65647	Gasket—Intake Elbow Mounting
55	297663	Housing—Rewind Starter
56	295871	Pulley—Rewind Starter
57	294303	Spring—Rewind Starter
58	66564	Rope—Rewind Starter
59	230228	Pin—Starter Grip
60	66728	Grip—Starter Rope
61	68848	Bumper—Starter Pulley
62	93254	Screw—Pulley Bumper Mounting Sem
63	260414	Spring—Ratchet
64	230543	Adapter—Ratchet Spring
65	93107	Screw—Rewind Starter Housing Mtg. Sem
66	298798	Clutch Assembly—Rewind Starter
67	211383	Housing—Rewind Starter
68	63770	Ball—Clutch
69	66718	Washer—Starter Clutch Thrust
70	298799	Ratchet—Rewind Starter Clutch
71	221653	Washer—Retainer
74	93042	Screw—Retainer Washer
76	68238	Seal—Ratchet Sealing
79	291356	Case Assembly—Gear
81	220790	Lock—Gear Case Mounting Screw
83	291762	Shaft Assembly—Drive
	Note:	**292470** Shaft Assy.—Drive Used on type Nos. 0133, 0134, 0149, 0151, 0157, 0173, 0175, 0176, 0180.
85	91386	Screw—Gear Case Cover (2" long)
86	291354	Cover Assy.—Gear Case
87	298423	Seal—Oil
88	27328	Gasket—Gear Case Cover
89	91488	Plug—Square Hd., 1/8," Pipe
90	293950	Carburetor Assembly
	Note:	**294805** Carburetor Assy. Used on type Nos. 0153, 0172. **296135** Carburetor Assy. Used on type Nos. 0019, 0121, 0164, 0167, 0181. **296724** Carburetor Assy. Used on type No. 0158.
91	291655	Body Assembly—Upper Carburetor
	Note:	**296723** Body Assy.—Upper Carburetor Used on type No. 0158.
92	99375	Body—Upper Carburetor
93	23108	Bushing—Throttle Shaft
94	†292681	Valve Assembly—Carburetor Idle
95	93038	Screw—Choke and Throttle Valve Mtg. Sem
96	62940	Valve—Throttle
97	291300	Shaft Assy.—Throttle
98	91920	Screw—Machine, Fill. Hd.—8-32 x 5/8"
99	26157	Spring—Throttle Adjustment
100	61967	Stop—Throttle
101	93043	Pin—Throttle Lever
102	†27034	Gasket—Carburetor Body
103	99333	Float—Carburetor
104	†230896	Pin—Float Hinge
105	†299096	Valve—Fuel Inlet
107	89915	Body Assembly—Lower Carburetor
	Note:	**291472** Body Assy.—Lower Carburetor Used on type Nos. 0153, 0172. **295860** Body Assy.—Lower Carburetor Used on type Nos. 0019, 0121, 0164, 0167, 0181. **296573** Body Assy.—Lower Carburetor Used on type No. 0158.
108	62872	Valve—Choke
	Note:	**22954** Valve—Choke Used on type Nos. 0153, 0172.
109	89531	Shaft and Lever—Choke
	Note:	**291440** Shaft, Vane and Lever Assy.—Automatic Choke **291776** Lever Assy.—Automatic Choke Includes: **90200** Screw—Machine, Fil. Hd.—8-32 x 1/2" Used on type Nos. 0153, 0172.

* Included in Gasket Set—Part No. 294736.

† Included in Carburetor Overhaul Kit—Part No. 291763.

200401 to 200466

REF. NO.	PART NO.	DESCRIPTION
		295374 Shaft and Lever—Choke
		Used on type Nos. 0019, 0121, 0164, 0167, 0181.
110	**62899**	Washer—Choke Lever
111	**26155**	Spring—Choke Lever
112	**23123**	Screw—Choke Lever
113	**†390395**	Nozzle—Carburetor
114	**†68667**	Gasket—Nozzle
118	**†99525**	Valve Assembly—Needle
119	**90746**	Screw—Machine, Fill. Hd. —10-32 x 5/8"
120	**92290**	Washer—Lock— No. 10 x 1/16 x 3/64"
121	**291763**	Carburetor Overhaul Kit
123	**93415**	Screw—Sem
158	**27590**	Filter—Carburetor Drain
159	**220521**	Retainer—Carburetor Drain Filter
163	***67247**	Gasket—Air Cleaner Mtg.
164	**291462**	Pipe Assy. —Air Cleaner
	Note:	**296036** Pipe Assembly—Air Cleaner
		Used on type Nos. 0019, 0121, 0126, 0127, 0133, 0134, 0157, 0173, 0175, 0176, 0180.
165	**92650**	Nut—Wing
166	**230739**	Stud—Air Cleaner
	Note:	**23870** Stud—Air Cleaner
		Used on type Nos. 0136, 0146, 0171.
		230768 Stud—Air Cleaner
		Used on type Nos. 0019, 0121, 0126, 0127, 0133, 0134, 0157, 0173, 0175, 0176, 0180.
167	**66648**	Gasket—Air Cleaner Stud
168	**22832**	Strap—Air Cleaner Pipe
169	**90832**	Washer—Lock— 1/4 x 3/32 x 5/64"
	Note:	**92778** Washer—Lock—Shakeproof
		Used to mount Blower Housing on type Nos. 0142, 0143, 0153.
170	**91468**	Screw—Cap, Hex. Hd.—1/4-20 x 3/8"
171	**92129**	Nut—Hex. —1/4-28
180	**291488**	Tank Assembly—Fuel (6 Quart)
	Note:	**290816** Tank Assy.—Fuel (4 Quart)
		Used on type Nos. 0120, 0121, 0134, 0141, 0143, 0149, 0150, 0152, 0168, 0172, 0188.
		292415 Tank Assy.—Fuel (8 Quart)
		Used on type Nos. 0132, 0140, 0179.
181	**69221**	Cap—Fuel Tank
182	**22813**	Bracket—Fuel Tank
	Note:	**221435** Bracket (Used between Tank Bracket and Crankcase)
		93535 Screw—Sem (2)
		22963 Washer—Flat (2)
		Used on type Nos. 0133, 0157, 0175, 0180.
183	**291490**	Strap Assy.—Fuel Tank
	Note:	**291367** Strap Assembly—Fuel Tank
		Used on type Nos. 0120, 0121, 0134, 0141, 0143, 0149, 0150, 0151, 0152, 0168, 0172, 0188.
184	**91257**	Screw—Machine, Fill. Hd. —1/4-20 x 1-1/4"
185	**90970**	Nut—Square—1/4-20
186	**67218**	Connector—Fuel Pipe (For Flexible Tubing)
186A	**63377**	Connector—Fuel Pipe (For Metal Fuel Pipe)
187	**299942**	Pipe—Fuel (Flexible Tubing)
187A	**29476**	Pipe—Fuel (Metal)
	Note:	**296576** Pipe—Fuel
		Used on type No. 0158.
188	**93535**	Screw—Sem
189	**90366**	Washer—Lock— 5/16 x 1/8 x 1/16"
192	**91397**	Nut—Hex. —5/16-18
196	**22907**	Support—Upper Fuel Tank
201	**26674**	Link—Throttle
204	**23849**	Bushing—Control Lever
206	**21772**	Nut—Governor Adjusting
	Note:	**93422** Stopnut
		Used on type Nos. 0010, 0019, 0020, 0021, 0022, 0030, 0121, 0125, 0126, 0127, 0131, 0137, 0138, 0139, 0145, 0148, 0149, 0150, 0151, 0155, 0160, 0162, 0178, 0183, 0184, 0191.
208	**230039**	Rod—Gov. Control
209	**26764**	Spring—Governor
	Note:	**26643** Spring—Governor
		Used on type Nos. 0173, 0175, 0176, 0180.
		260815 Spring—Governor (2" long)
		260816 Spring—Governor (2-1/2" long)
		Used on type Nos. 0126, 0127.
219	**291192**	Gear Assy.—Governor
223	**22814**	Lever—Governor Control
	Note:	Governor Control Lever used on type Nos. 0133, 0134, 0157, 0173, 0175, 0176, 0180 is furnished by the equipment manufacturer.
225	**291177**	Shaft—Governor Gear
227	**291365**	Lever Assy.—Governor
	Note:	**298399** Lever Assy.—Governor
		Used on type Nos. 0126, 0127.
230	**22826**	Washer—Governor Crank
240	**295984**	Filter Assembly—Fuel
		Used with Flexible Fuel Pipe
	Note:	**99910** Filter Assembly—Fuel
		Used with Metal Fuel Pipe.
		295977 Filter Assy.—Fuel
		Used on type Nos. 0133, 0157, 0175, 0180.
		297563 Outlet Assembly (at Tank)
		298090 Filter (in Fuel Pipe)
		Used on type Nos. 0010, 0020, 0022, 0120, 0164, 0184.
241	**296005**	Cover Assy.—Fuel Filter
		Used with Flexible Fuel Pipe.

* Included in Gasket Set—Part No. 294736.

† Included in Carburetor Overhaul Kit—Part No. 291763.

REF. NO.	PART NO.	DESCRIPTION
	Note:	**99909** Cover Assembly—Fuel Filter Used with Metal Fuel Pipe. **296019** Cover Assembly—Fuel Filter Used on type Nos. 0133, 0157, 0175, 0180.
242	**295913**	Valve—Fuel Shut-Off
	Note:	**293934** Valve—Fuel Shut-Off Used on type Nos. 0010, 0020, 0022, 0120, 0164, 0184.
243	**22547**	Screen—Fuel Filter
244	**230318**	Connector—Fuel Pipe Used with Flexible Fuel Pipe.
	Note:	**53029** Connector—Fuel Pipe Used with Metal Fuel Pipe. **67218** Connector—Fuel Pipe Elbow Used on type Nos. 0022, 0133, 0157, 0175, 0180.
245	***68477**	Gasket—Fuel Filter Bowl
246	**298683**	Bowl—Fuel Filter
247	**99665**	Yoke Assembly—Fuel Filter
266	**291460**	Control—Throttle
268	**65616**	Casing—Control Wire—72" long
	Note:	If longer casing is required, specify length in inches; if shorter casing is needed, order No. 65616 and cut to required length.
269	**26633**	Wire—Control—78" long
	Note:	If longer wire is required, specify length in inches; if shorter wire is needed, order No. 26633 and cut to required length.
270	**63426**	Locknut—Control Wire Casing
271	**290568**	Lever Assy.—Control
	Note:	**93469** Screw—Sem Used to mount Control Lever on type Nos. 0149, 0150, 0151, 0162, 0183, 0184, 0191.
285	**26684**	Link—Choke
286	**291445**	Thermostat Assembly
287	**90050**	Screw—Machine, Rd. Hd.—6-32 x 1/4"
288	**90362**	Washer—Lock—No. 6 x 3/64 x 1/32"
289	**23886**	Support—Thermostat
290	**291444**	Tube Assy.—Thermostat
291	**26594**	Thermostat
292	**23885**	Support—Thermostat
293	**23884**	Stop—Thermostat Shaft
294	**92678**	Screw—Set, Socket Hd.—6-32 x 5/16"
295	**23954**	Shaft—Thermostat
296	**291044**	Lever Assy.—Thermostat
300	**290933**	Muffler—Exhaust
301	**91416**	Nipple—Exhaust, Pipe
302	**91310**	Locknut—Muffler
303	**91296**	Elbow—Exhaust 90°, Pipe
	Note:	**91308** Elbow—Exhaust, 90° Street Used on type No. 0148. **91415** Elbow—Exhaust, 45° Used on type Nos. 0175, 0176, 0180, 0182. **92130** Elbow—Exhaust, 45° Street Used on type Nos. 0123, 0134.
304	**291280**	Housing—Blower
	Note:	**294144** Housing—Blower Used on type Nos. 0142, 0143. **294742** Housing—Blower Used on type Nos. 0019, 0118, 0120, 0126, 0127, 0134, 0157, 0173, 0174, 0176, 0178, 0182. **295194** Housing—Blower Used on type No. 0141. Rewind Starters used on type No. 0141 are Model S-475, Type 69-K made and serviced by Fairbanks Morse & Co., Beloit, Wisconsin. **297237** Housing—Blower Used on type Nos. 0022, 0164, 0183. **297579** Housing—Blower (with Rewind Starter Adapter Ring) Used on type No. 0180.
305	**93158**	Screw—Sem
306	**220861**	Shield—Cylinder
308	**294683**	Cover—Cylinder Head
321	**211166**	Pulley—V-Belt Starter
323	**66828**	Belt—Vee
	Note:	**68878** Belt—Vee Used on type Nos. 0118, 0127.
325	**299308**	Pulley and Screen—Electric Starter
328	**221531**	Guard—Belt
329	**93294**	Screw—Belt Guard Mounting Sem
332	**230674**	Nut—Flywheel
	Note:	**23949** Nut—Flywheel Used on type No. 0188.
333	**298968**	Armature Assembly
	Note:	**299700** Armature Assy. Used on type Nos. 0142, 0143, 0153, 0188.
334	**93381**	Screw—Armature to Mounting Bracket Sem
	Note:	**92791** Washer—Lock—Shakeproof is used with 93381 Screw to secure Ground Wire to Armature on type Nos. 0142, 0143, 0153.
337	**29693**	Plug—Spark (with Gasket)
	Note:	Spark Plugs 29693 and 293918 use Ignition Cable Terminal No. 221798. **291954** Plug—Spark Used on type Nos. 0142, 0143, 0153. **293918** Plug—Spark Used on type Nos. 0023, 0129, 0131, 0145, 0161, 0165, 0169.
339	**298185**	Breaker Assy.—Ignition
340	**26018**	Spring—Breaker Arm
342	**298123**	Plunger—Contact

* Included in Gasket Set—Part No. 294736.

200401 to 200466

REF. NO.	PART NO.	DESCRIPTION
343	**298060**	Condenser
345	**211327**	Cover—Breaker
346	**93400**	Screw—Breaker Cover Mtg.
	Note:	**93550** Screw Used in upper hole in Breaker Cover for mounting Insulator on type Nos. 0142, 0143, 0153.
347	**220197**	Switch—Stop
	Note:	**29372** Switch—Stop Used on type No. 0180. **293739** Switch—Stop Used on type Nos. 0121, 0174.
348	**221976**	Switch—Stop
353	**92791**	Washer—Lock—Shakeproof (2)
354	**90576**	Nut—Lock (2)
356	**295413**	Wire—Ground
	Note:	**299579** Wire—Ground Used on type Nos. 0142, 0143, 0153. **299907** Wire—Ground Used on type Nos. 0171, 0187, 0188.
357	**91540**	Key—Pulley Mounting
358	**294736**	Gasket Set
362	**291630**	Shield—Spark Plug
	Note:	**66538** Elbow—Spark Plug Used on type Nos. 0120, 0121, 0174.
363	**19068**	Puller—Flywheel (Optional Accessory)
379	**22984**	Cover—Fuel Pump Hole
383	**89838**	Wrench—Spark Plug
386	**27314**	Gasket—Fuel Pump Hole Cover
400	**230010**	Wrench—Socket Screw
423	**93410**	Screw—Cable Clamp Mtg.
451	**90364**	Washer—Lock—No. 8 x 3/64 x 1/32"
	Note:	**92791** Washer—Lock—Shakeproof (3) Used on type Nos. 0142, 0143, 0153.
492	**390555**	Starter—Generator (Delco-Remy No. 1101695) Uses: **296182** Pulley (Delco-Remy No. 1943222)
	Note:	**297779** Starter—Generator (Delco-Remy No. 1101864) Uses: **296182** Pulley (Delco-Remy No. 1949358) Used on type Nos. 0118, 0127.
493	**211153**	Bracket—Starter
	Note:	**211786** Bracket—Starter Used after Serial No. 6810281 on type Nos. 0118, 0127. **211622** Bracket—Starter Used before Serial No. 6810251 on type Nos. 0118, 0127.
497	**91203**	Screw—Cap, Hex. Hd.—5/16-18 x 1-3/4"
500	**91325**	Washer—Plain
	Note:	**90366** Washer—Lock Used with 91325 Washer on type No. 0127.
501	**295924**	Regulator—Voltage (Delco-Remy No. 1118988)
506	**90200**	Screw—Machine, Rd. Hd.—8-32 x 1/2"
	Note:	**90072** Screw—Machine, Rd. Hd.—8-32 x 5/8" (2) Used on type Nos. 0142, 0143, 0153.
507	**66895**	Insulator
	Note:	**299598** Insulator Used on type Nos. 0142, 0143, 0153, 0171, 0177, 0179, 0188.
508	**93158**	Screw—Sem
517	**22809**	Pulley—Rope Starter
518	**69932**	Rope—Starter
	Note:	**295904** Rope—Starter Used on type Nos. 0133, 0134, 0135, 0157, 0168, 0173, 0175, 0176, 0185.
521	**291508**	Shielding—Ignition Cable
	Note:	**299554** Shielding—Ignition Cable Uses: **66298** Bushing—Spark Plug Terminal **92704** Terminal—Spark Plug Used on type Nos. 0142, 0143, 0153.
535	**270093**	Element—Air Cleaner
536	**297869**	Cleaner—Air
	Note:	**291858** Cleaner Assy.—Air Uses: **27401** Gasket—Air Cleaner (Filter to Bowl) Used on type Nos. 0136, 0146, 0171.
550	***22353**	Washer—Valve Cover
551	**22795**	Cover—Valve
552	**23837**	Bushing—Governor Crank
553	**62222**	Cup—Valve Spring
554	**66203**	Shaft—Cam
556	**90887**	Screw—Cap, Hex. Hd.—3/8-16 x 1-1/4"
557	**92636**	Screw—Cap, Hex. Hd.—1/2-20 x 2"
558	**92268**	Washer—Lock—3/8 x 1/8 x 3/32"
	Note:	**90366** Washer—Lock—5/16" x 1/8 x 1/16" Used to mount Starter Bracket to Cylinder on type No. 0127.
559	**93294**	Screw—Sem
560	**91984**	Pin—Cotter—1/16 x 1/2" long
562	**92613**	Bolt—Governor Lever
563	**92863**	Screw—Self Tapping, Hex. Hd.—1/4-20 x 5/8"
564	**92980**	Screw—Cap, Hex. Hd.—1/4-20 x 1/2"
565	**93142**	Screw—Bracket to Base Mounting
566	**99458**	Idling Device Uses: **92747** Screw—Sem For mounting to Intake Elbow
567	**291364**	Crank Assy.—Governor
568	**290935**	Base Assembly—Engine
	Note:	Base used on type Nos. 0126, 0127 is furnished by the equipment manufacturer. **21897** Base—Engine Uses: **89859** Nipple—Oil Filler Used on type No. 0143.

* Included in Gasket Set—Part No. 294736.

REF. NO.	PART NO.	DESCRIPTION
		294757 Base Assembly—Engine Used on type Nos. 0010, 0020, 0022, 0164, 0181, 0183, 0184, 0191.
		297574 Base Assembly—Engine Used on type Nos. 0133, 0134, 0157, 0173, 0175, 0176, 0180.
569	***27293**	Gasket—Engine Base
570	**291377**	Support Assembly—Plain Bearing
	Note:	**291378** Support Assy.—Ball Bearing Used only on Model 200431 through 200436 engines.
572	**291476**	Guide—Front Air
573	**298863**	Plate—Back
	Note:	**299677** Plate—Back Used on type Nos. 0142, 0143, 0153.
586	**22906**	Lock—Flywheel Nut
587	**221340**	Clamp—Cable
588	**211438**	Bracket—Armature Mtg.
589	**93473**	Screw—Armature Bracket to Cylinder Mounting Sem
590	**93171**	Screw—Breaker Mtg. Sem
591	**65932**	Plug—Camshaft
592	**90356**	Nut—Hex.—10-24
593	***27295**	Gasket—Plain or Ball Bearing Support—.020″ Thick
	***27296**	Gasket Plain or Ball Bearing Support—.005″ Thick
	***27297**	Gasket—Plain or Ball Bearing Support—.009″ Thick
594	**91449**	Screw—Bracket Mounting
	Note:	**92272** Screw—Cap, Hex. Hd.—5/16-18 x 3/4″ Used on type No. 0127 to mount Strap to Generator.
601	**93053**	Clamp—Fuel Pipe (2)
605	**297171**	Bracket—Support
606	**221471**	Strap—Adjusting
	Note:	**221934** Strap—Adjusting Used on type Nos. 0118, 0127.
608	**297011**	Starter Assy.—Rewind
636	**92864**	Washer—Lock
	Note:	**92791** Washer—Lock—Shakeproof (2) Used on type Nos. 0142, 0143, 0153.
637	**66154**	Washer—Back Plate Terminal (2)
638	**26404**	Washer—Back Plate Term.
639	**270176**	Gasket—Breaker Cover
640	**298141**	Lead—Primary
	Note:	**299580** Lead—Primary Used on type Nos. 0142, 0143, 0153.
642	**221468**	Cover—Air Cleaner
643	**280001**	Cup—Air Cleaner
644	**221466**	Base—Air Cleaner
645	**230775**	Bushing—Plunger
646	**221472**	Brace—Bracket
647	**211154**	Anchor—Link
648	**91439**	Screw—Cap, Hex. Hd.—1/4-20 x 3/8″
649	**93123**	Screw—Cap, Hex. Hd.—5/16-18 x 1-1/4″
650	**91814**	Screw—Cap, Hex. Hd.—3/8-16 x 2″
	Note:	**91162** Screw—Cap Hex. Hd. Used on type No. 0127 to mount Starter Bracket to Cylinder.
652	**91162**	Screw—Link Anchor Mtg.
653	**91442**	Screw—Pulley Mounting
654	**230783**	Nut—Contact Point Adjusting Screw
655	**221014**	Anchor—Spring
668	**260647**	Spacer (used between end of Ratchet and Starter Pulley)
669	**297187**	Bracket—Guard
694	**91324**	Washer—Guard to Bracket Mounting
722	**68768**	Seal—Plunger
723	**93516**	Eyelet—Seal Retainer
724	**221873**	Retainer—Plunger Seal
762	**297651**	Electric Starter—Generator Kit—12 Volt

* Included in Gasket Set—Part No. 294736.

200401 to 200466